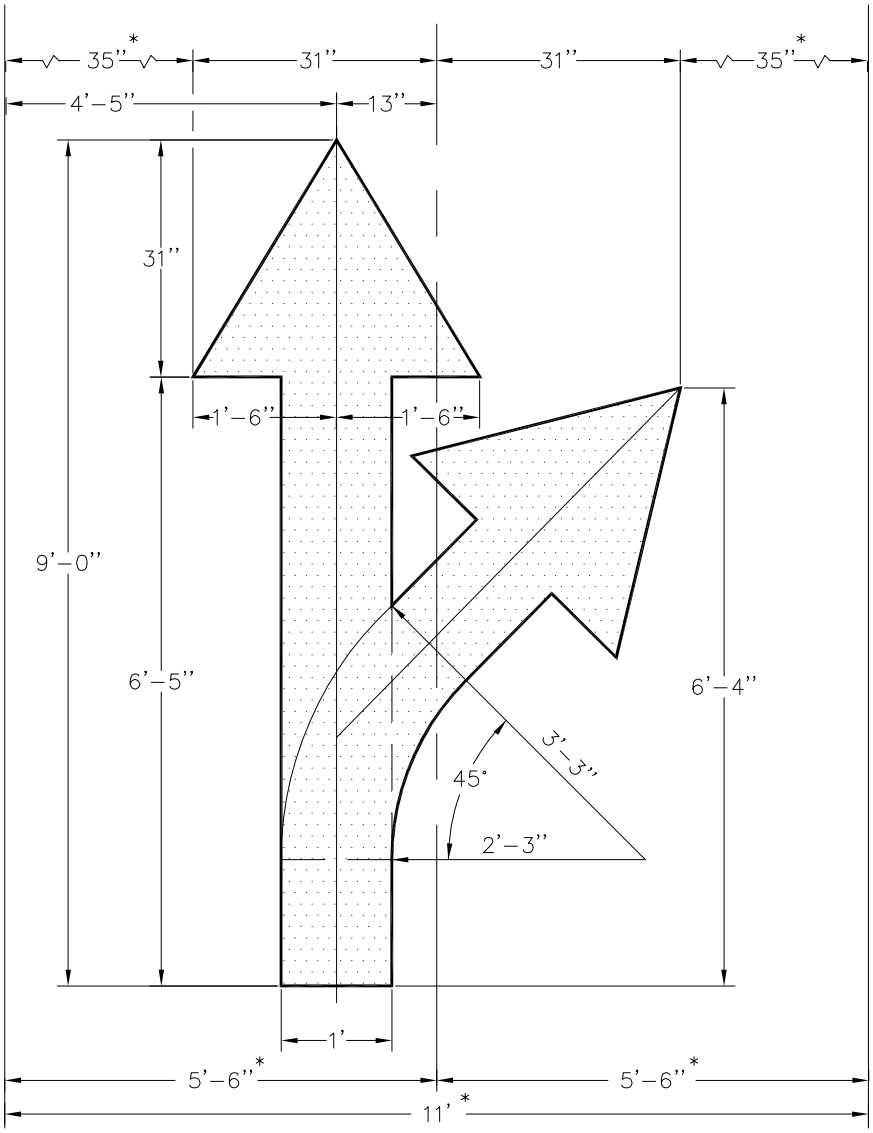


* BASED ON TYPICAL 11-FOOT LANE WIDTH

THRU AND RIGHT TURN ONLY
ARROW DETAIL
ADOPTED
CITY OF RENTON

STANDARD PLANS
LST DATE: 04/04

| DATE | REVISION | BY | APPR'D |
|---|---|---|---|
| | | | |
| | | | |

DWG. NAME: H011

SP PAGE: H011